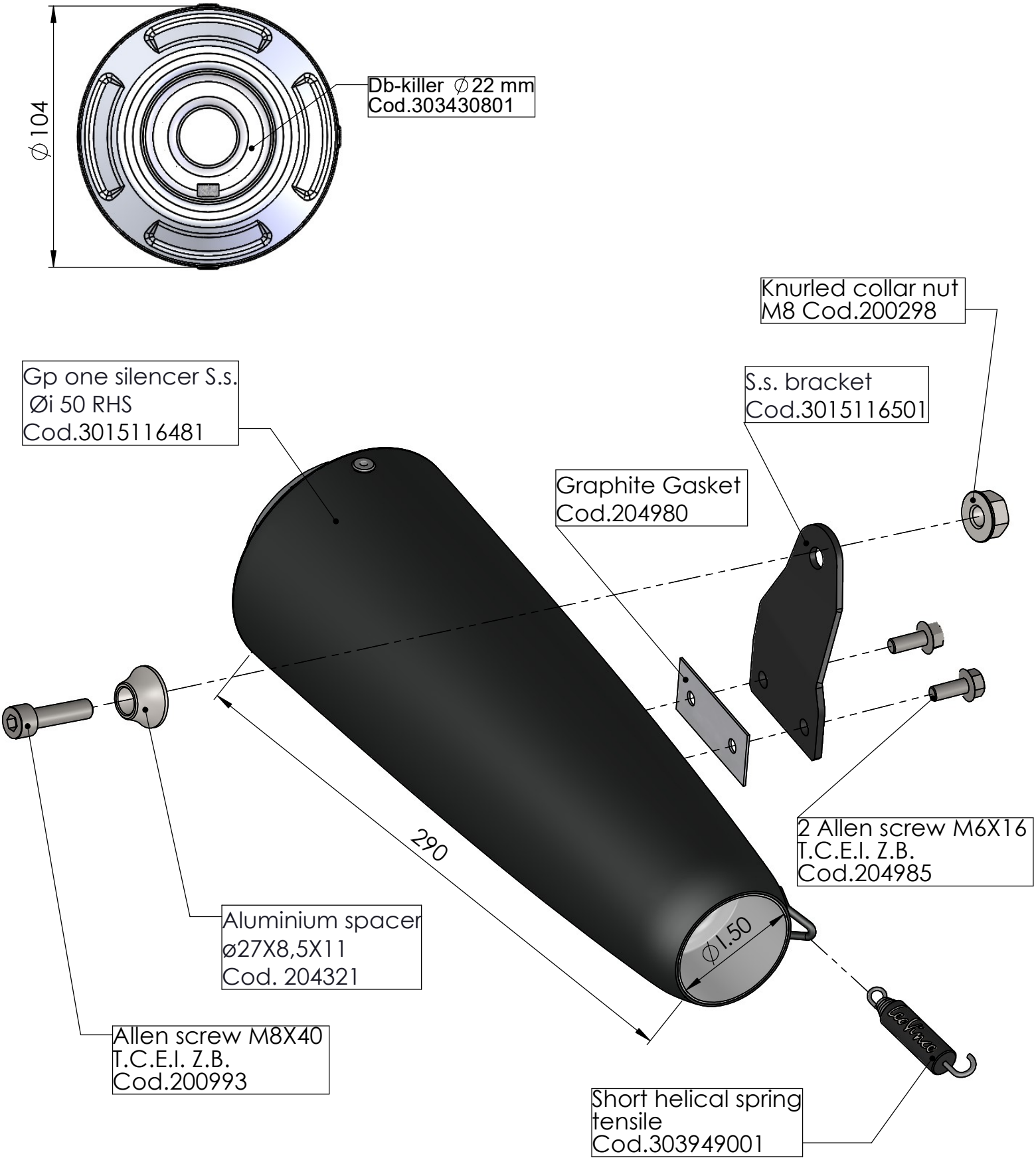

ART.9763

MUFFLER KIT - GP ONE - STAINLESS S.