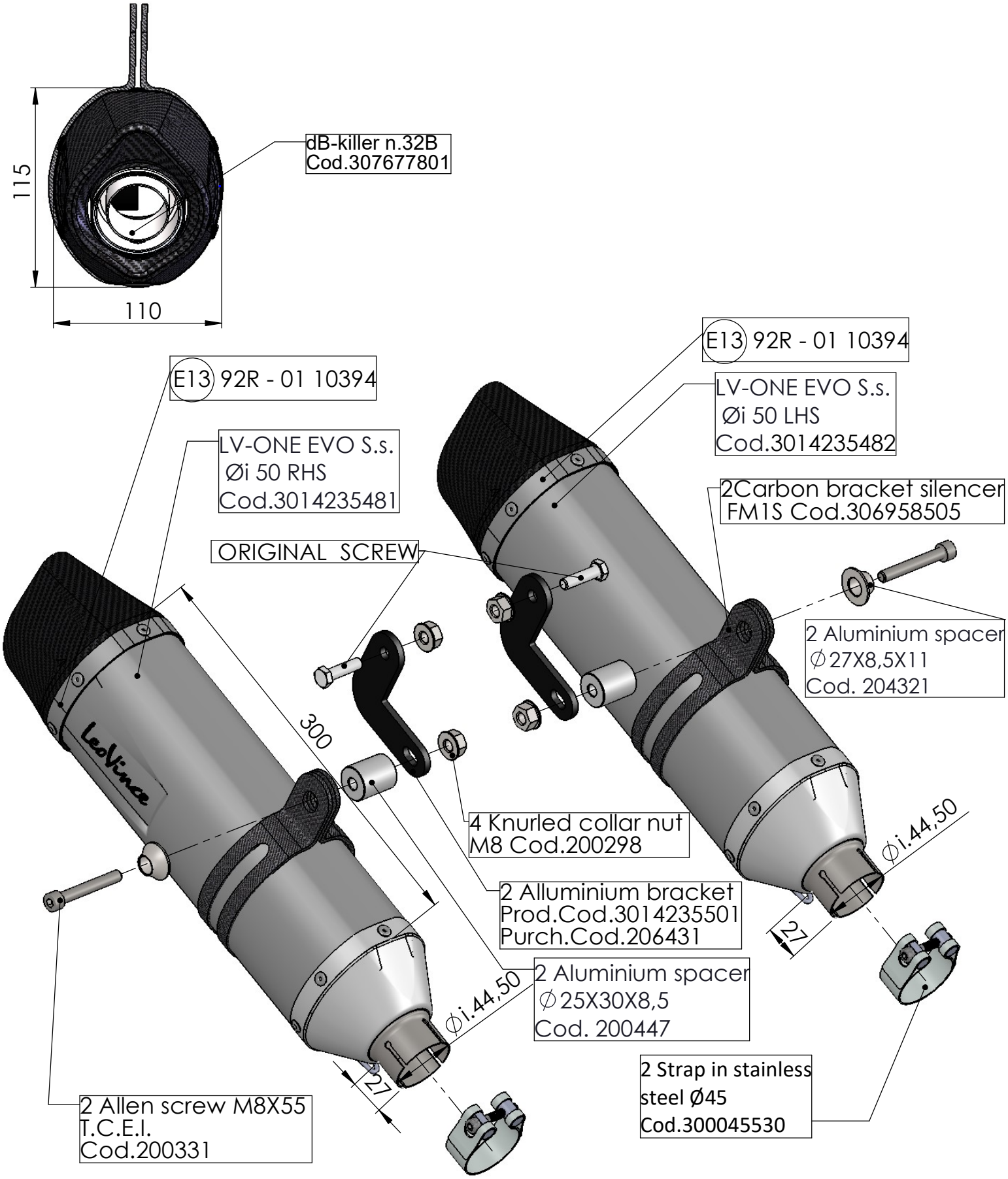

Art. 14235E

TRIUMPH SPEED TRIPLE 1050

SLIP-ON - LV ONE EVO - STAINLESS S.