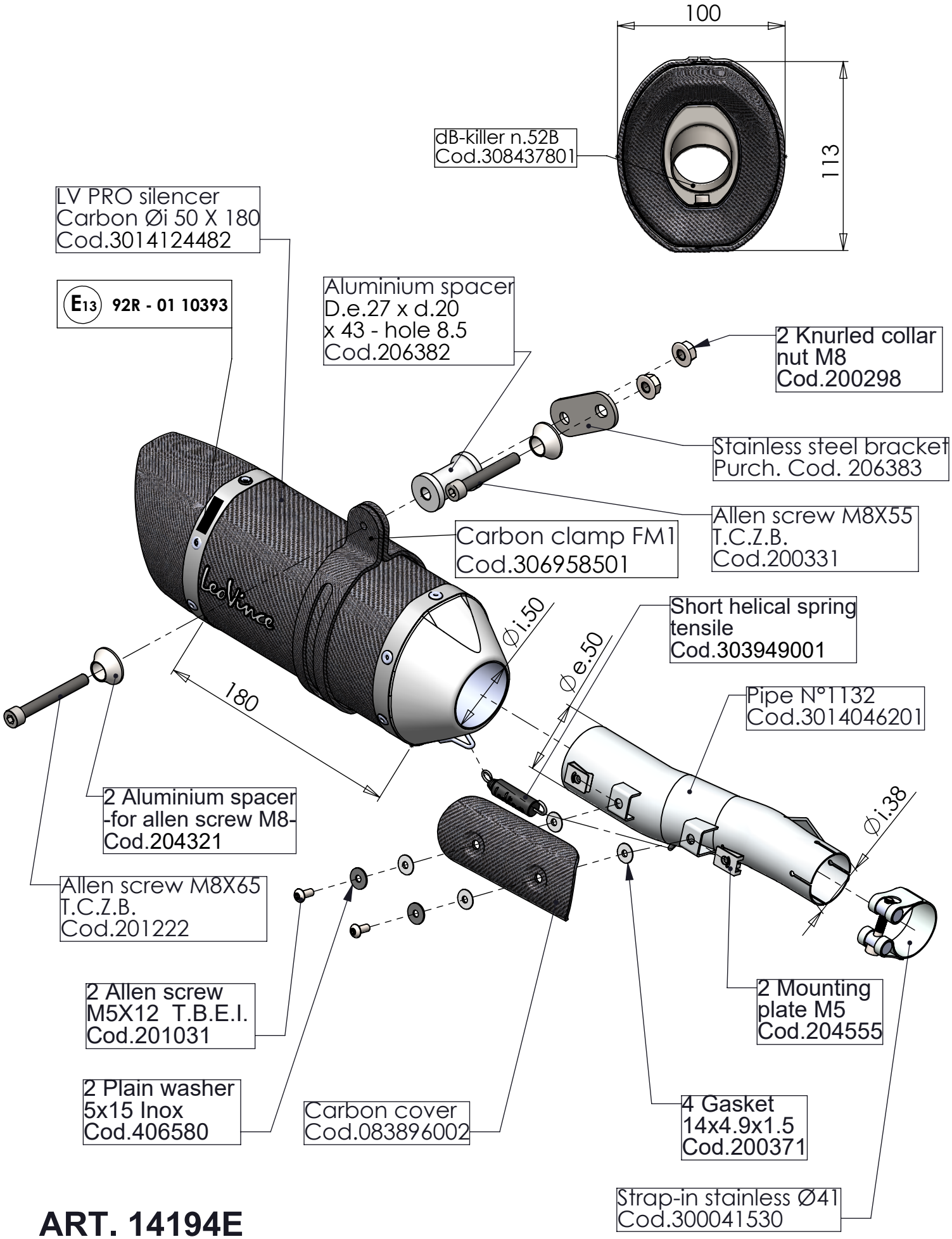

ART. 14194E

HONDA X-ADV 750

SLIP-ON - "LV PRO" CARBON - APPROVED