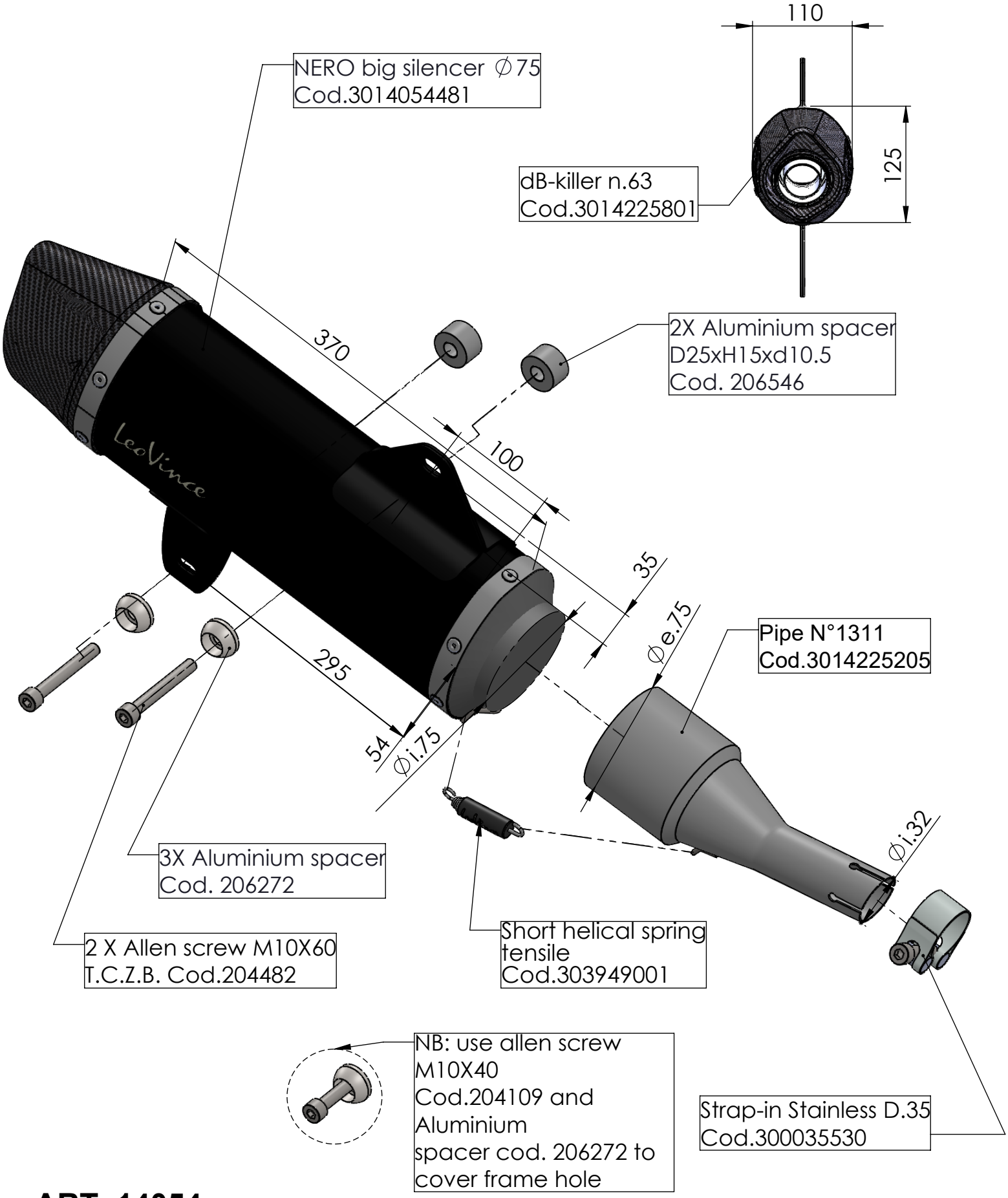

ART. 14054

YAMAHA X-MAX 300

SLIP ON - NERO - STAINLESS STEEL