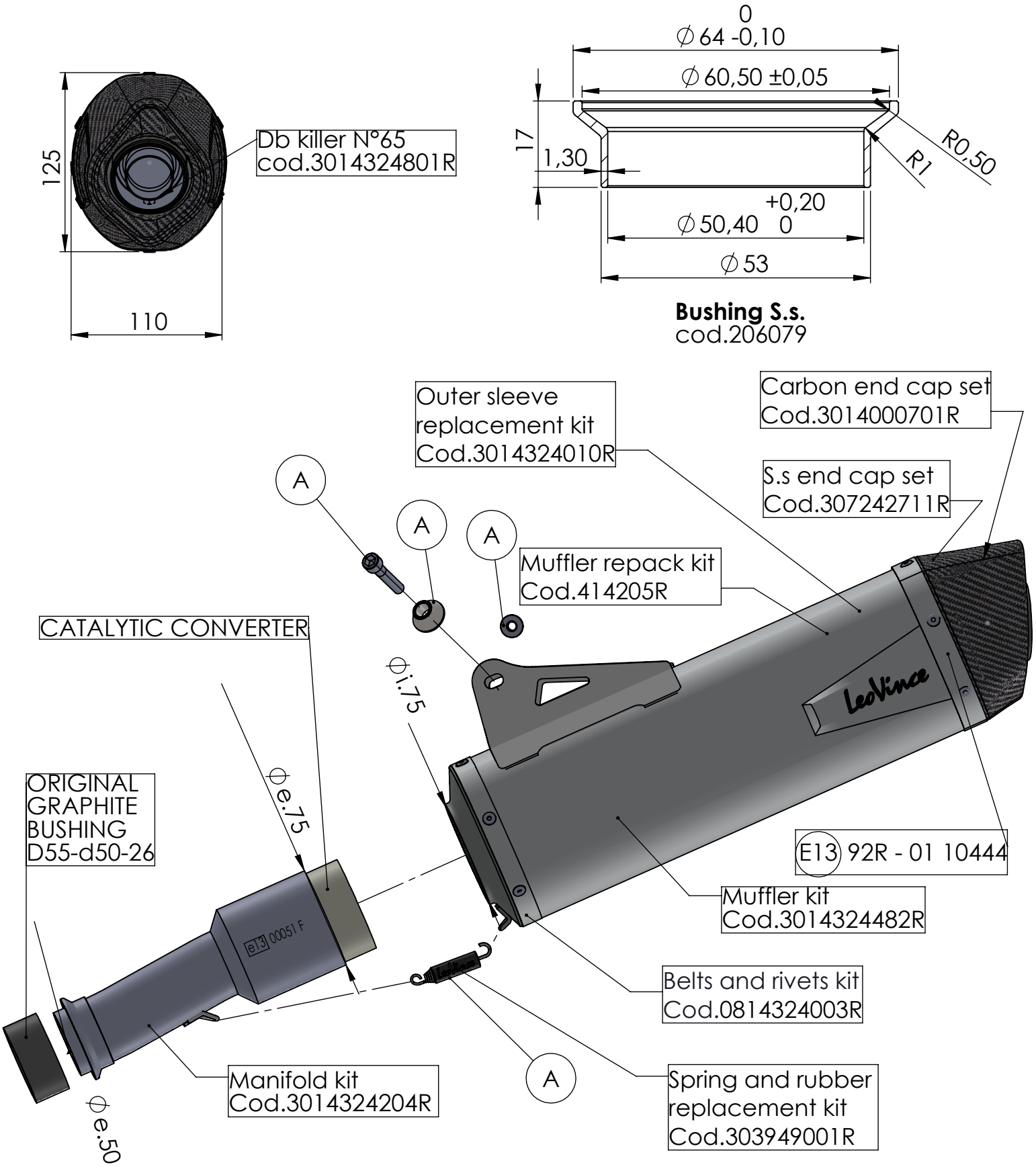

ART. 14324EK SPARE PARTS

KTM 690 ENDURO R / 690 SMC R
(also fits 35kW version)

Ⓐ FITTING KIT Cod. 3014065601R